DATA SHEET

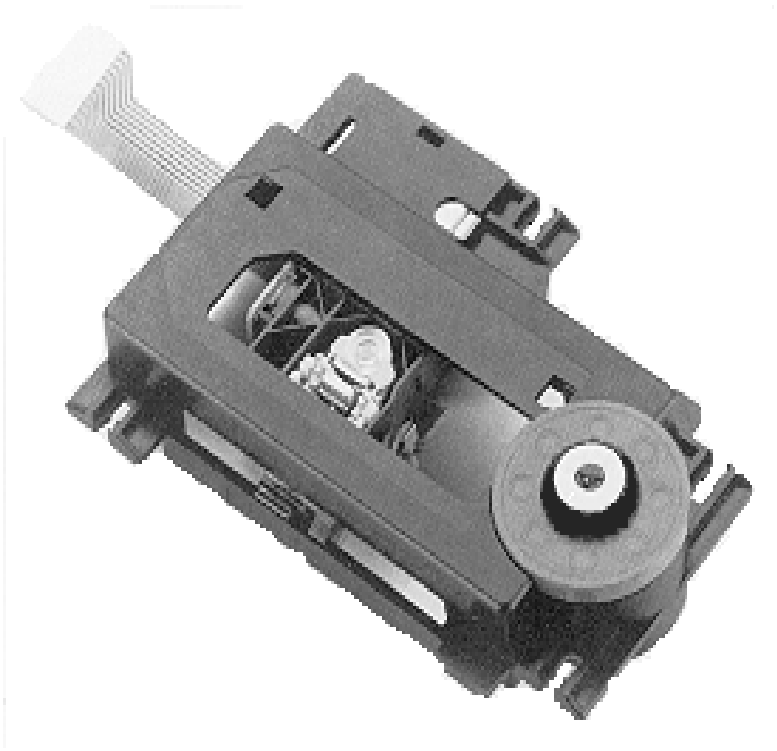

VAM1202/12

CD mechanism for 2x Speed

Product specification
Version 1.1

September 2000

Philips Components

PHILIPS

SCOPE OF THIS DOCUMENT

- This document describes the Commercial specification of the CD mechanisms.
- The provisions of this document may be altered upon agreement between both parties
- If any disagreement should arises, this two parties shall meet in good faith to resolve the matter
- Within the range of these specifications, parts are subjected to change without prior notice for technical improvement.
- Please ensure to observe strictly the following, otherwise. PHILIPS may not be able to assume the responsibility for things to happen :

  * Always use the CD mechanism(s) within the conditions given in the specification

  * No additional process be given to the CD mechanism(s)

  * Ensure the set contains PHILIPS CD mechanism(s) is in compliance with the rules and regulations for spurious radiation

  * Measure the leakage of laser output from a set containing the CD mechanism(s) and ensure that the set is in compliance with applicable requirements

  * Always adhere to the handling instructions

All Rights are reserved. Reproduction in whole or in part is prohibited without the prior written consent of the copyright owner.

The information presented in this document does not form part of any quotation or contract, is believed to be accurate and reliable and may be changed without notice. No liability will be accepted by the publisher for any consequence of its use. Publication thereof does not convey nor imply any license under patent or other industrial or intellectual property rights.

Type Number :- VAM1202/12
Code Number (12NC) :- 9305 022 20212

Revision History

Version	Nr.	Page	Date	Remarks
1.0	-	All	-	First Release
1.1	5	14	1 Sep 2000	Changes in Lightpen and Turntable material list
	3.1	11		Delete *Full Spec* and replace *Functional* to *Operational Temp* Typo error, *Operational Temp*: -10 to +55°C

TABLE OF CONTENTS

1. GENERAL INFORMATION 5

2. SPECIFICATION 6

2.1 TEST CONDITIONS 6
2.2 SPECIFIED VALUES 6
2.2.1 General 6
2.2.2 Opto-electrical 7
2.3 SIGNALS 8
2.4 MECHANICAL 9
2.5 ELECTRO-MECHANICAL 10

3. APPLICATION INFORMATION 11

3.1 APPLICATION CONDITIONS 11
3.2 REFERENCE APPLICATION CIRCUIT 11
3.3 PLAYABILITY SPECIFICATION 12

4. RELIABILITY 13

4.1 GENERAL 13
4.2 SHOCK SENSITIVITY FOR TRANSPORT 13
4.3 SHOCK SENSITIVITY IN PACKING 13

5. STANDARDS 14

6. HANDLING INSTRUCTIONS 15

7. OPTIONAL ACCESSORIES 15

TABLE OF FIGURES

FIG. 1A: RECOMMENDED MEASURING CIRCUIT DIAGRAM (PART 1) 16
FIG. 1B: RECOMMENDED MEASURING CIRCUIT DIAGRAM (PART 2) 17
FIG. 2: RECOMMENDED WIRING DIAGRAM 18
FIG. 3A: RECOMMENDED CLAMPER 19
FIG. 3B: RECOMMENDED CLAMPER (FREE SPACE) 20
FIG. 4: RECOMMENDED CLAMPER 21
FIG. 5A: RECOMMENDED SUSPENSION 22
FIG. 5B: RECOMMENDED SUSPENSION (BUILT-IN INFO) 23
FIG. 6: ELECTRICAL DATA 24
FIG. 7: MECHANICAL DRAWING 25
FIG. 8: LIGHTPATH 26
FIG. 9: FOCUS S-CURVE 27
FIG. 10: RADIAL CURVE 28
FIG. 11: TEMPERATURE FACTOR 29
FIG. 12: FOCUS CHARACTERISTICS 30
FIG. 13: RADIAL CHARACTERISTICS 31
FIG. 14: TURNTABLE 32
FIG. 15: RECOMMENDED ORNAMENTAL PLATE 33
FIG. 16: MECHANICAL DATA FOIL 34
FIG. 17: FLEXIBLE FOIL APPLICATION INFO 35
FIG. 18: ESD PROTECTION AND HANDLING INSTRUCTIONS 36
FIG. 19: CONTENTS AND PLACEMENT OF LABEL 37
APPENDIX 1: MABUCHI FF-030PK-08250 MOTOR DATA 38
APPENDIX 2: MABUCHI RF-300CH-11400 MOTOR DATA 39

1. GENERAL INFORMATION

The VAM1202/12 is a modular CD-mechanism, using a 2-stage, 3-spot system.
It contains the following modules:

- a light pen with holographic lightpath
- the actuator
- the disc motor : a DC motor with a turntable prepared for magnetic clamping
- the frame with the sledge drive and switch
- the foil with the laser supply

The CD mechanism is suitable for a wide variety of Video-CD applications for portable, systems and stand alone use.

To cope with this broad application range, the VAM1202/12 needs to be flexible:

- suitable for 12 and 8 cm. discs according to the RED BOOK standard
- small size
- applicable in horizontal and vertical position
- accessories available, e.g. loading device, suspension, clamping device, wire connector
- wide operating temperature range
- prepared for a variety of approbation/safety standards

The CD-mechanism is designed to be incorporated with the following :

Product	Type Number	Code Number (12NC)
Tray Loaders	L1210/65	9305 023 20265
	L1210/68	9305 023 20268
Changer	C1203/28	9305 024 20228

2. SPECIFICATION

2.1 Test conditions

Parameter	Min.	Typ.	Max.	Unit
Ambient temperature		25 ± 5		° C
Relative humidity	45		75	%
Air pressure	86		106	kPa
Setting angle horizontal turn table up		0 ± 5		°
Setting angle vertical		0 ± 5		°

Note : - Measuring circuit : see fig.1
- AC-equipment : minimum bandwidth 2 MHz.

Test disc	Code number (12NC)
SBC444A	7104 099 24990
Burn-in	7104 087 04860

2.2 Specified values

2.2.1 General

Parameter	Min.	Typ.	Max.	Unit	Notes
Connections					See fig. 6 : pinning / See fig.16 : mech. data
Current consumption			300	mA	In play condition : horizontal
Dimensions					See fig. 7
Min. read-out diameter		44 ± 0.3		mm	
Max. read-out diameter		117.9 ± 0.5		mm	

2.2.2 Opto-electrical

Parameter	Min.	Typ.	Max.	Unit	Notes
LDGU					Sharp GH6C005B3BA
Optical lightpath					See fig. 8
Focus error detection					Single Foucault
Tracking error detection					3-beam method
Numerical aperture		0.45			
Working distance		1.8		mm	bottom side disc to top side lens
Power intensity out of objective lens			0.43	mW	According IEC825-1 (1993-11)
Laser : wavelength (T=30°C)	760	780	800	nm	
Supply voltage	4		6	V	
Supply current		46	90	mA	
Photodiodes					See fig. 6
Dark reverse current			10	nA	
Terminal capacitance					< 3 pF (D2, D3, D4) < 5 pF (D1, D5)
Response time 5%-95%					< 120 ns (D2, D3, D4) < 200 ns (D1, D5)

2.3 Signals

Parameter	Min.	Typ.	Max.	Unit	Notes
Measuring discs					Test disc Sub 8 (Philips internal test disc)
Photodiodes layout					See fig. 6
I_{sum} (D1+D2+D3+D4+D5)	8.0	9.0	10.0	µA	On test disc Sub 8 Tr 8
Straylight		15		% of I_{sum}	
Focus S-curve amplitude pp		34		% of I_{sum}	
Slope of S-curve					Monotonic
Slope of S-curve for $\lvert z \rvert \leq 1\mu m$ [VFE=(D2-D3)/(D2+D3)]					$\delta(V_{FE})/\delta z$: 20 - 28 %/µm
Allowed change of slope within temp range from 5°C to 55°C with respect to T_{amb} = 25°C	-20		+20	%	
Peak-peak value S-curve		12		µm	
S-curve polarity					See fig. 9
Radial offset [=$(D1-D5)_{dc}/(D1+D5)_{dc}$]			11	%	
Radial error signal [=$(D1-D5)_{ac\ PP}$]		10		% of I_{sum}	
Allowed change of radial error signal within temp range from 5°C to 55°C with respect to Tamb = 25°C	-30		+30	%	
Change of radial error $(D1-D5)_{ac\ PP}$ from track 1 - 24			15	%	
RF signal amplitude $_{PP}$		5.7		µA	

Note:
I_{sum} = Substrate current crosstracks in focus, incl straylight
Straylight = Substrate current without disc.

2.4 Mechanical

Parameter	Min.	Typ.	Max.	Unit	Notes
Dimensions	98 x 72 x 18.2 mm				See fig. 7
Read-out diameter (min)		44 ± 0.3		mm	
Read-out diameter (max)		117.9 ± 0.5		mm	
Position switch point (PSP)		24.1 ± 1.0		mm	Centre nominal position lens to centre turntable
Condition of switch :					
Actuator outside PSP	Open				
Actuator inside PSP	Closed				
Access time			4	sec	(with TDA 1301 T) From 1st to last track on burn-in test disc
Weight		89		gr	

Disc drive motor

Parameter	Min.	Typ.	Max.	Unit	Notes
Motor					Mabuchi RF300 CH11400
For detail information see appendix 2					

Turntable

Parameter	Min.	Typ.	Max.	Unit	Notes
Fixed cone			40	µm	Max excentricity
Clamping force (Fcl)	1.35N				With clamper (3104 147 12080) measured with a burn-in disc
Skew of turntable			1.7	mrad	
Weight on turntable			7	kg	

Sledge drive motor

Parameter	Min.	Typ.	Max.	Unit	Notes
Motor					Mabuchi FF030PK-08250 / Matsushita PPN7KB09B
Transmission ratio	I = 30, 000 rad/m				
For detail information see appendix 1					

2.5 Electro-mechanical

Characterisation of actuator, focus and radial movement
Ambient temperature: 20°C ± 1°C for measurements

General

Parameter		Notes
Temp factor		See fig. 11
Temp factor for AC values	-0,4 %/°C	
Moving mass	0,60 gr	
Q-factor coils	8 – 12	
Voltage	3 VDc	

Focus movement

Parameter	Min.	Typ.	Max.	Unit	Notes
Resonant frequency		30 ± 4		Hz	
AC sensitivity at 200 Hz		0.27 ± 20%		N/A	
Sensitivity DC		0.70		mm/V	
Resistance		18 ± 15%		Ω	
Stroke		± 0.8		mm	
Max voltage on coils	3 V Dc				
Maximum deviation from ideal actuator characteristic					See fig. 12

Note: Graphs valid at 20 ± 1 °C

Tracking movement

Parameter	Min.	Typ.	Max.	Unit	Notes
Resonant frequency		49 ± 7		Hz	
AC sensitivity at 200 Hz		0.28 ± 20%		N/A	
Sensitivity DC		0.27		mm/V	
Resistance		18 ± 15%		Ω	
Stroke		± 0.6		mm	
Maximum deviation from ideal actuator characteristic					See fig. 13

Note: Graphs valid at 20 ± 1 °C

3. APPLICATION INFORMATION

Note: Environment conditions acc. to IEC68-2 and with discs according to the RED Book specifications, unless otherwise specified.

3.1 Application conditions

For operation

Temperature range in set	Operational Temp	-10 °C - +55 °C
Humidity range		5 % - 90 % RHD

Note: “Functional” = discs acc to Red Book specifications

For storage

Temperature range	Long term	-25 °C - +55 °C
Exposure (recovery time 4h)	Short term	48 hr/70 °C
Humidity range		5 % - 95 % RHD

Note: After being subjected to the above operational conditions, given a recovery time of 4 hours in 25°C and no condensation present on the lens, the CD mechanism will comply to the specification.

Position for usage and storage

Horizontal	Recommended	
Vertical	Allowed	Side A or B below and all positions in between (see fig. 7)
	Recommended	Side A below

3.2 Reference application circuit

Diagram with digital servo DSIC2 (TDA 1301T) and decoder SAA 7341 (CD4+) or (CD6).
See fig 1b.

3.3 Playability specification

General criteria: No track loss and no audible defects.

Test disc

Wedge	SBC 444A	700 μm
Black dot	SBC 444A	700 μm
Eccentricity		150 μm
Skew	Optical (8cm)	0.6°
	Mechanical (12cm)	0.4°
Fingerprint	SBC 444A	No audible mute

Test disc : Burn in
Disc motor control : 3 to 20 Hz
Position of microphone : 10 cm above turntable
Vam1201 must be measured in free field (anechoic room). Hard noise reflecting materials in direct environment are not permitted.

4. RELIABILITY

4.1 General

	Typical	Mode	Notes	Performance at end of test
Lifetime	500 h B1	Play / Repeat	Burn-in disc	Fully Functional
	5.000 h B10			
MTBF	30.000 h 100% duty cycle			
Climates	Acc to IEC-68			

4.2 Shock sensitivity for transport

Shock acc IEC 68-2-27-E	Max 100g during 6msec	3 times 6 directions
Bumps acc IEC 68-2-29-Fb	Max 40g during 6msec	500 times 3 directions
Vibrations acc IEC 68-2-Fc	10-58 Hz 0.15mm pp	
	58-150 Hz 2g 3 sides	
	10 cycles	

4.3 Shock sensitivity in packing

In packing	10 Hz, 2g, 20 min/side, 3 sides

5. STANDARDS

VAM1202/12 has been designed to comply with safety standards of various countries. However, since its approval depends on the application, this unit is not approved as a unit.

The CD mechanism is prepared for the following standards:

UL 1492
UL 1950
UL 1270
UL 1409
CSA-C22.2 No. 1-M90

The CD mechanism is UL recognised (RMNQ2): 99ET13724
UL file number: E143838 type number: VAM1202/12

The CD mechanism is evaluated by UL for material flammability requirements only, in accordance with the standard for information technology equipment, UL 1950.

Part name	Material manufacturer	UL-file	Grade	Generic name	Type No.	ID-mark
Laser (LDGU)	Sharp	E143838			GH6C005B3BA	
Mounting plate	Bayer AG	E41613	94V1	PC	Makrolon 8035	PC-GF30
Turntable	Bayer China	E178485	94V2	PC	Makrolon 2405	PC
	UE Plastics	E161723	94V2	PC	Lexan 221R	PC
Light pen	Dupont	E123598	94V0	LCP	Zenite 6130 L	LCP-GF30
Guide block	LNP	E45195	94V1	PC	DFL 4044	PC-GF20-SD20

6. HANDLING INSTRUCTIONS

- Usage and storage in dusty, high temperature and high humidity environments should be avoided.
- To avoid damage to the LDGU by electrostatic discharges, measuring equipment and operators must be grounded during handling (see fig. 18). The user of this unit must take all necessary precautions to avoid ESD (Electro-Static Discharge) failures during handling and assembly of this unit into the end product.
- Contamination of the objective lens will influence the performance. Avoid fingerprints on the lens, handle the mechanism in a clean environment.
- The actuator with lightpath has been adjusted carefully during manufacturing. High forces on this part may damage the unit and have to be avoided.
  Avoid touching this part!! Do not disassemble or readjust!!
- Safety: The (invisible) laser beam may damage the human eye. Avoid that people can look directly or indirectly into the objective lens when the power is switched on.
- Fast heating up (e.g. by bringing the mechanism from a cold place into a warm and humid room) can result in moisture condensing on the lens, thus influencing the playability for a certain time. Before checking the performance the mechanism should stabilise for at least 4 hours. See also the recovery times mentioned in UAN-D 1590.
- Please keep the short circuit clip on the flex foil mounted as long as possible. Remove just before installing the CD mechanism in the final application to avoid the risk of damage by electrostatic discharges.

7. OPTIONAL ACCESSORIES

12NC	Description	Top Loader	Single Tray Loader	3 Disc Changer
3104 147 12080	Clamper assembly	●	●	
3104 147 12210	Clamper assembly			●
3139 194 00431	Suspension	●	●	●
3104 141 22340	Ornamental plate	●		
3104 148 00100	Wiring CDM (280mm)	●	●	●

Fig. 1a: Recommended measuring circuit diagram (part 1)

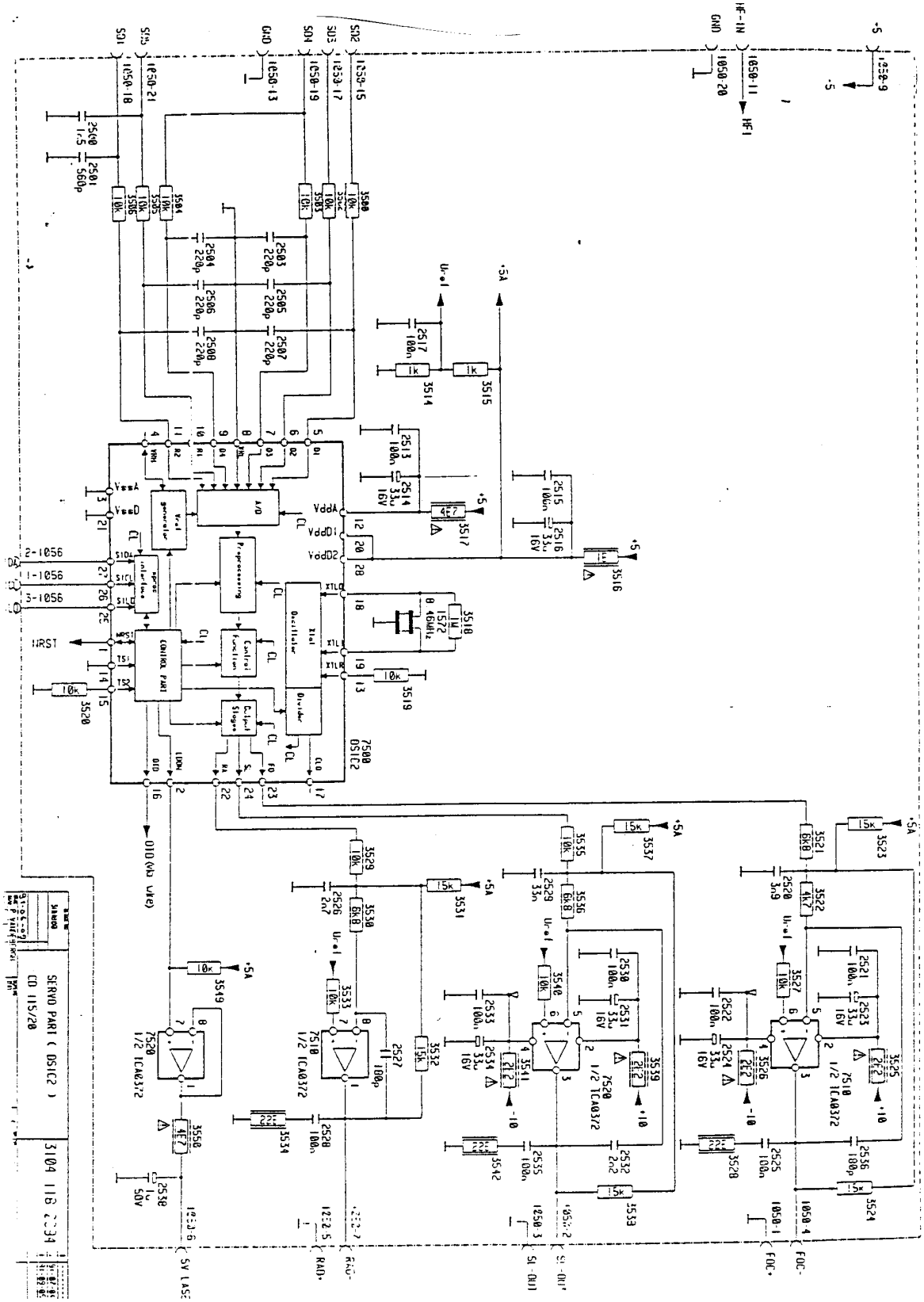

Fig. 1b: Recommended measuring circuit diagram (part 2)

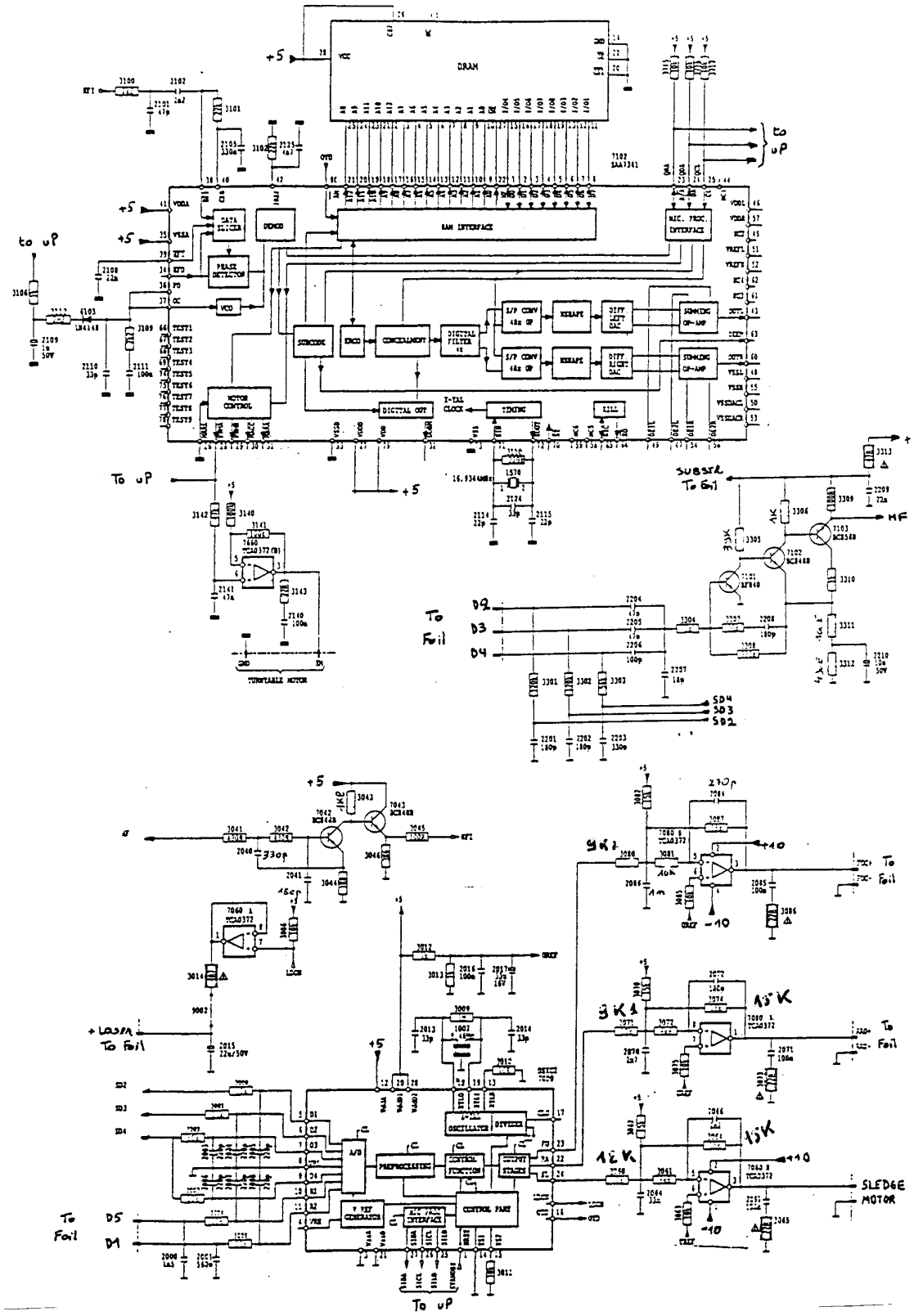

ALL RESISTORS 1 %

Fig. 2: Recommended wiring diagram

Nr. Off	Description	Code Number	Length	Item Nr.
1	Lead BLK.	AWG 28 7 x 0.127	245	1
1	Lead ORG.	AWG 28 7 x 0.127	240	2
1	Lead GRN.	AWG 28 7 x 0.127	250	3
1	Lead YLW.	AWG 28 7 x 0.127	270	4
1	Lead BLU.	AWG 28 7 x 0.127	262	5
1	Lead WHT.	AWG 28 7 x 0.127	262	6
				7
				8
				9
				10
1	Housing	JST	XHP-6	11
6	Contact	JST	SXH-002T-P0.6	12

12NC : 3104 148 00100

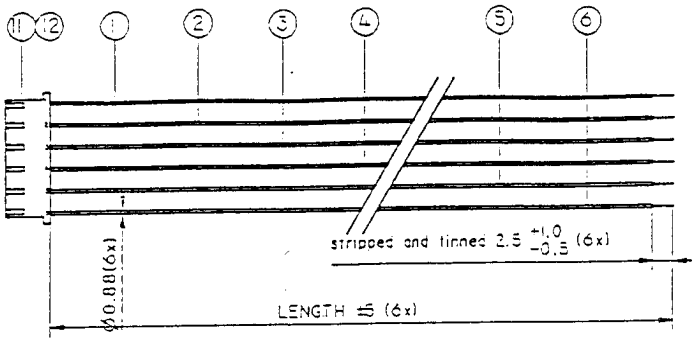

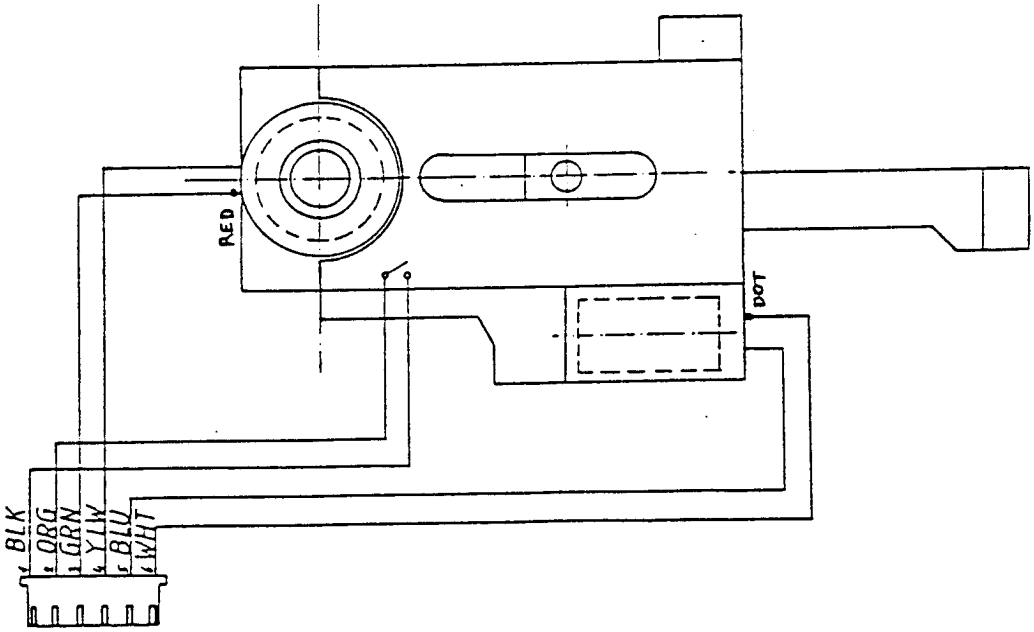

Fig. 3a: Recommended clamper

FOR INFORMATION ONLY
Note: Measurements are in mm.

12NC : 3104 147 12080
1 : Pressure ring
2 : Magnet Ø13.2 x 3 material SrFe O 19 (STRONIUM FERRITE)
3 : Metal ring Ø18 x 0.5 material St 37

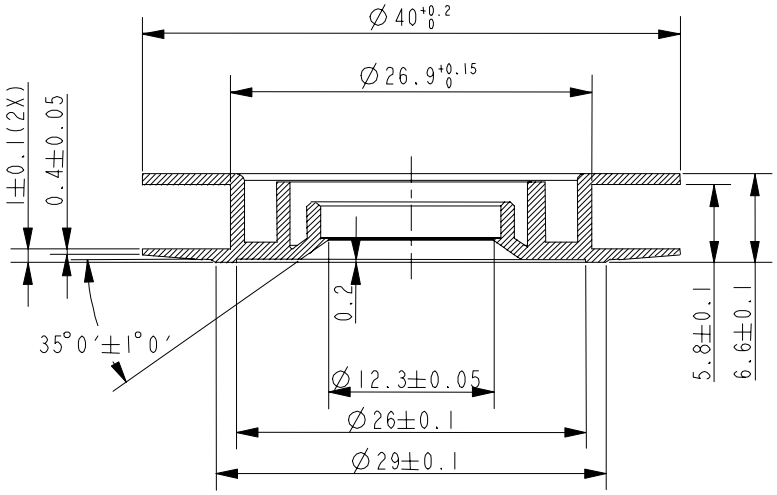

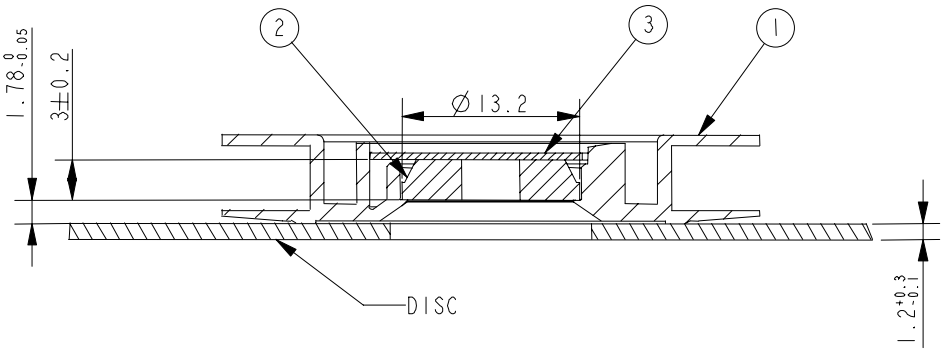

Fig. 3b: Recommended clamper (free space)
FOR INFORMATION ONLY
Note: Measurements are in mm.

Min. free space around disc and CD mechanism:

X,Y	2 mm.
Z	1 mm.

Min. free space around turntable and clamper:

X,Y	2 mm.
Z	see drawing

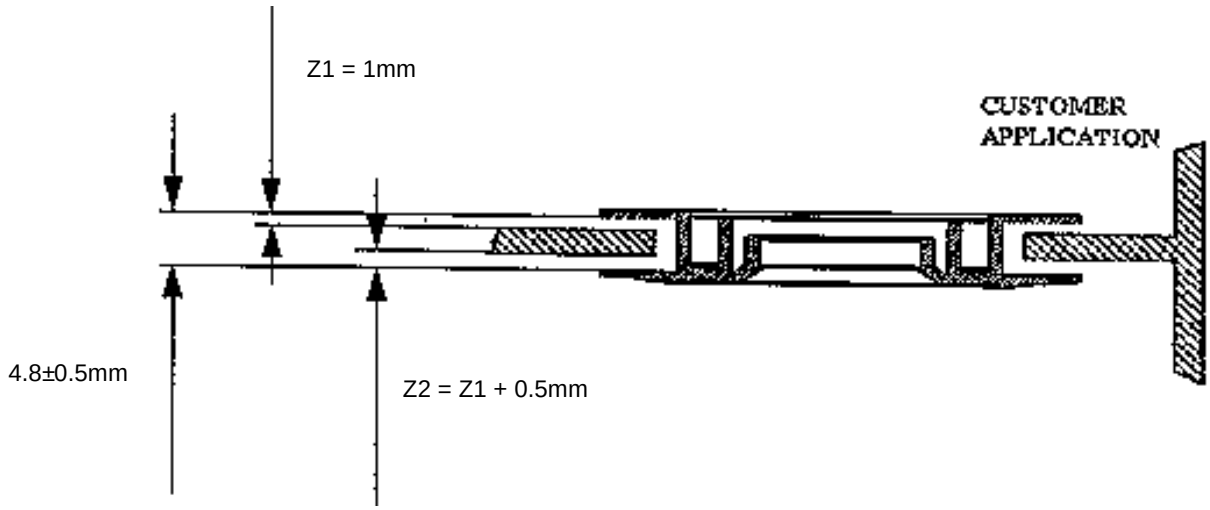

Fig. 4: Recommended clamper

FOR INFORMATION ONLY
Note: Measurements are in mm.

12NC : 3104 147 12210
1 : Pressure ring
2 : Magnet
3 : Closing Plate

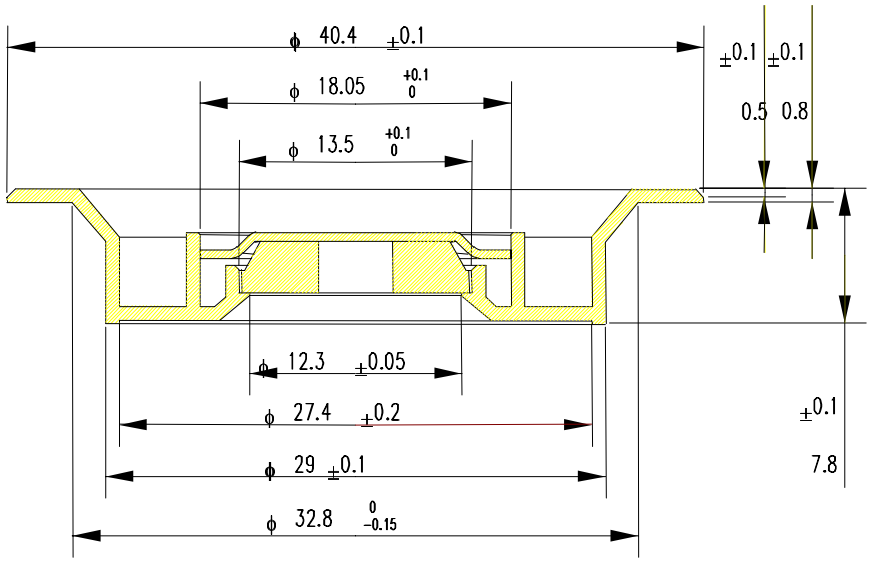

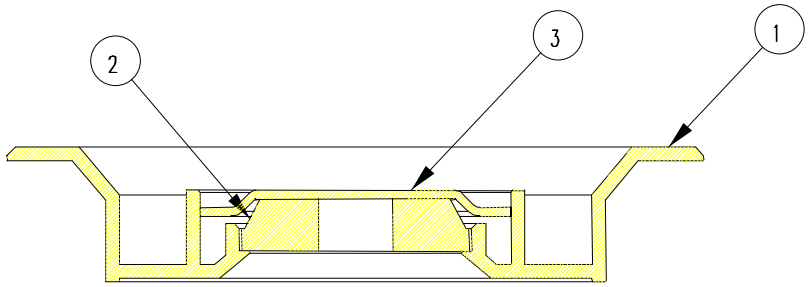

Fig. 5a: Recommended suspension

Material	**Typical suspension characteristics**	
	Orientation	**Frequency**
Silicone rubber type : SIL-233-C	X	26 Hz
Colour : Black	Y	30 Hz
Hardness : 82 I.R.H.D.	Z	35 Hz
Note : Free space around should be minimum 2 mm.		

FOR INFORMATION ONLY
Note: Measurements are in mm.

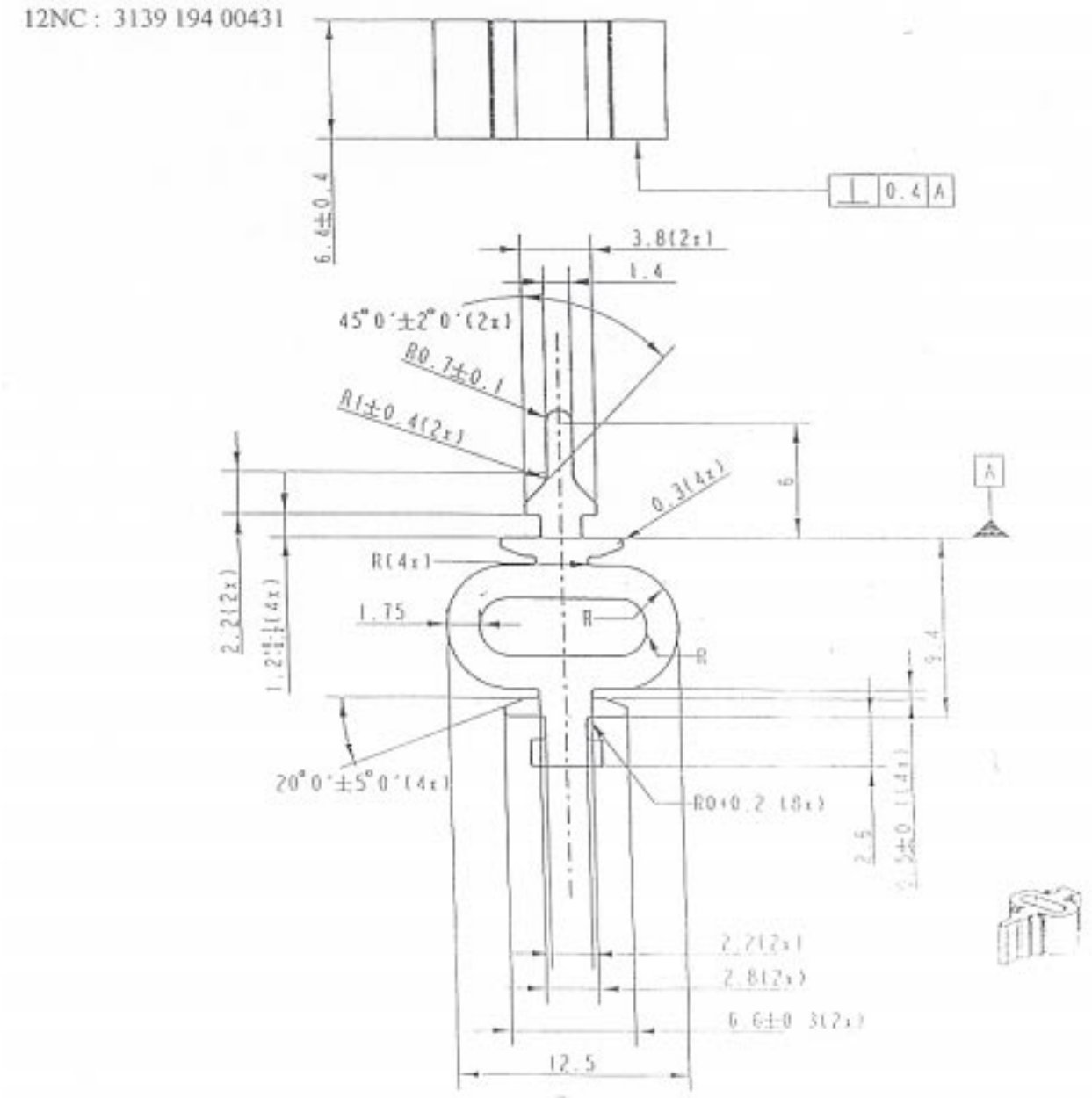

Fig. 5b: Recommended suspension (built-in info)

FOR INFORMATION ONLY
Note: Measurements are in mm.

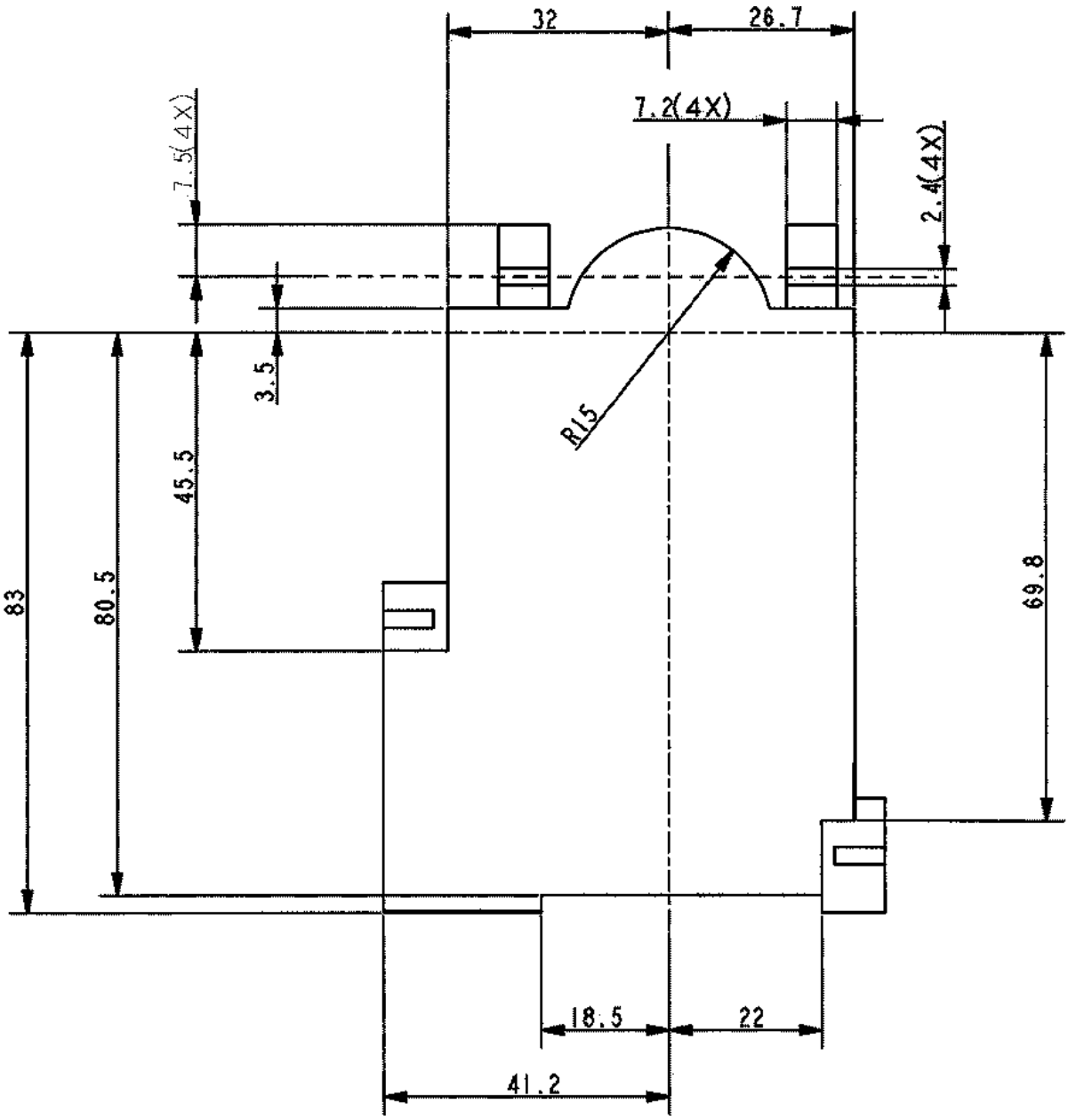

CUT OUT FOR CDM

Fig. 6: Electrical data

Electrical circuit:

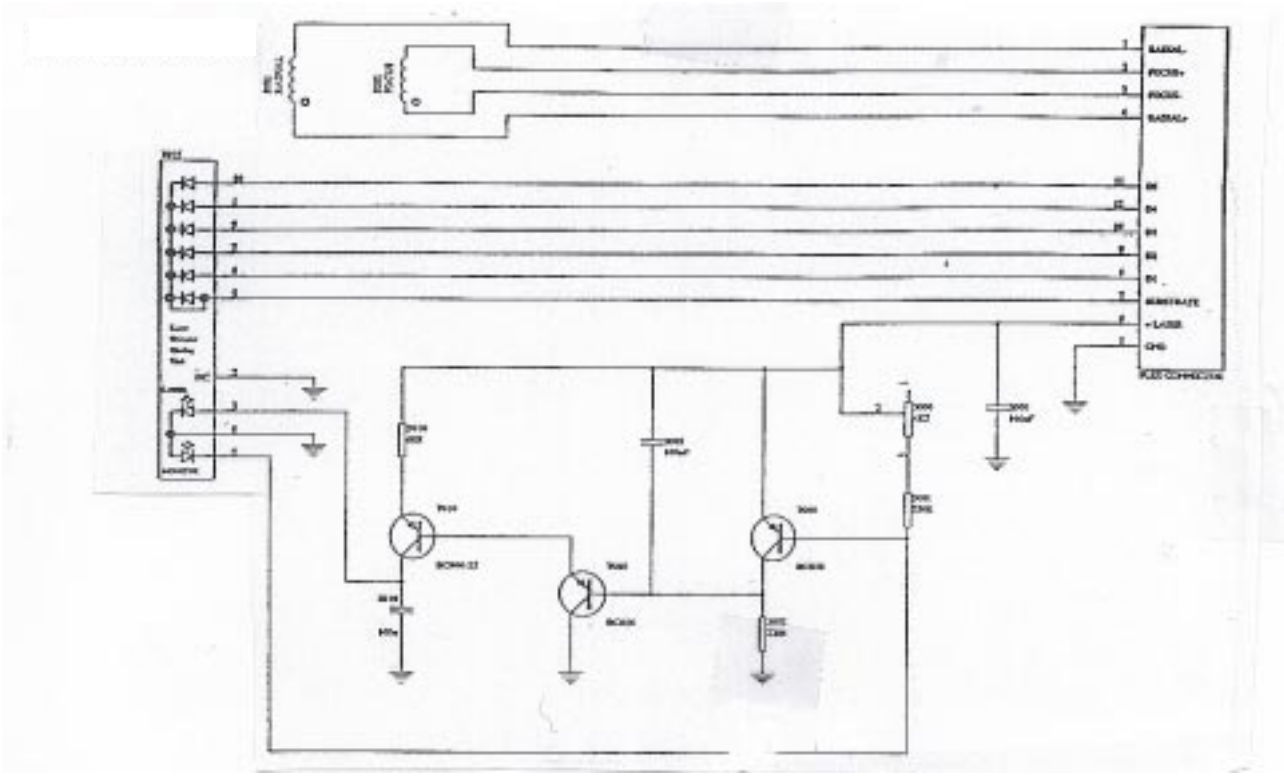

Photodiodes layout:

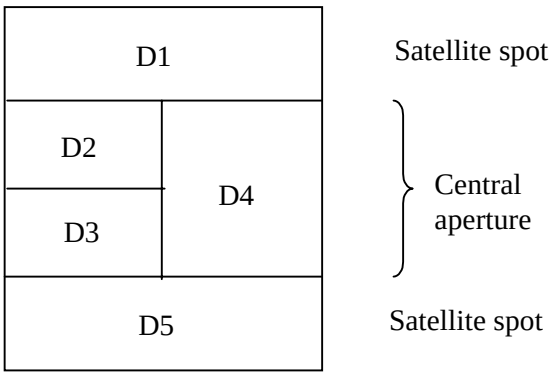

Flexfoil connections:

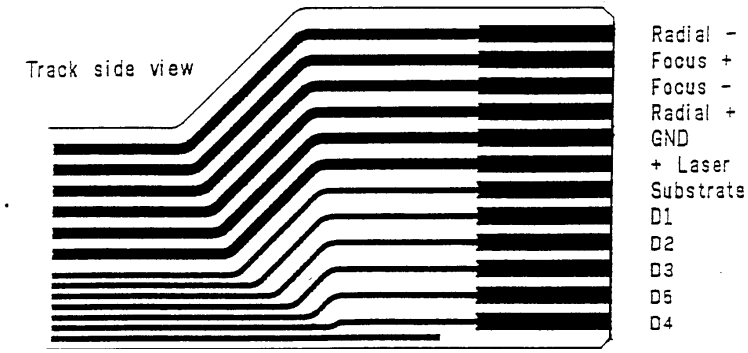

Fig. 7: Mechanical drawing

Centre of gravity:
X = + 24.5 (actuator position R=45)
Y = + 6
H1 = 19.95 H2 = 20
H3 = 20 H4 = 19.9
Tolerance: +0.4/-0.5 with recommended suspension

FOR INFORMATION ONLY
Note: Measurements are in mm.

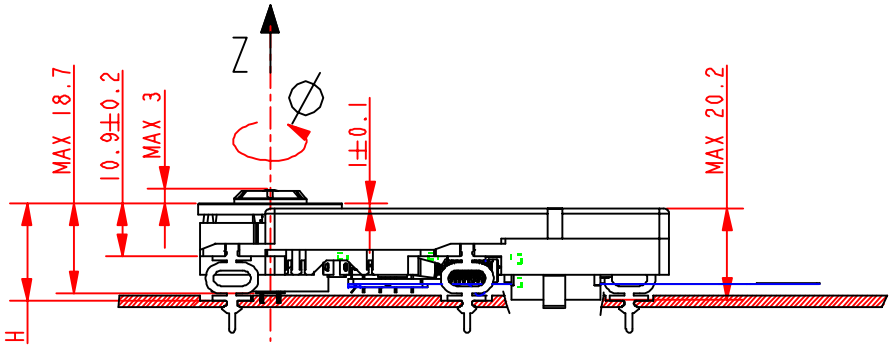

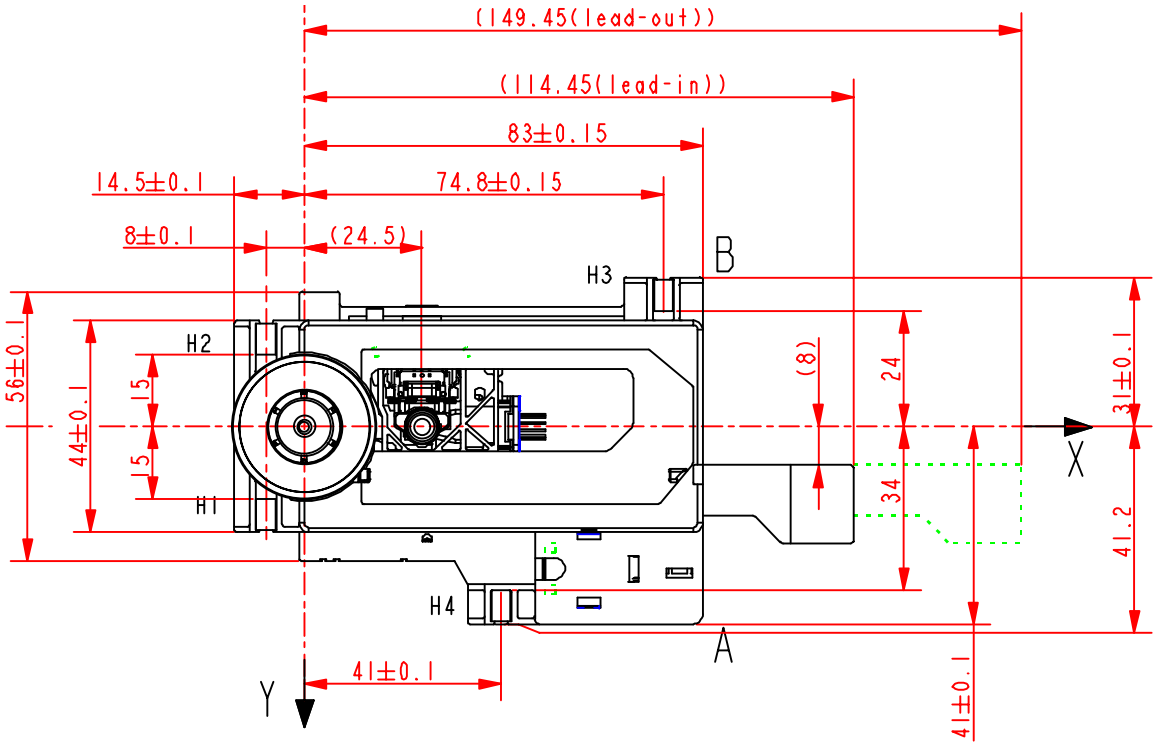

Fig. 8: Lightpath

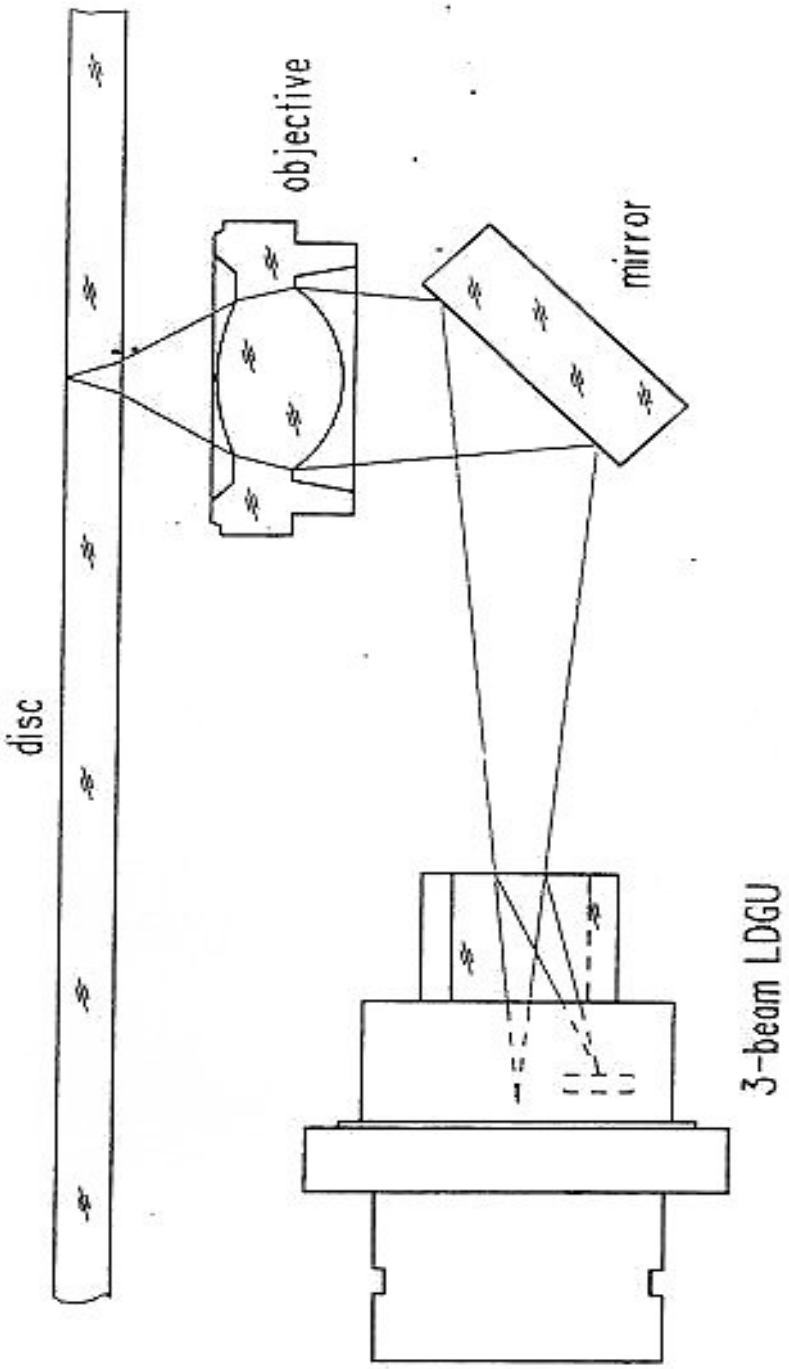

Fig. 9: Focus S-curve

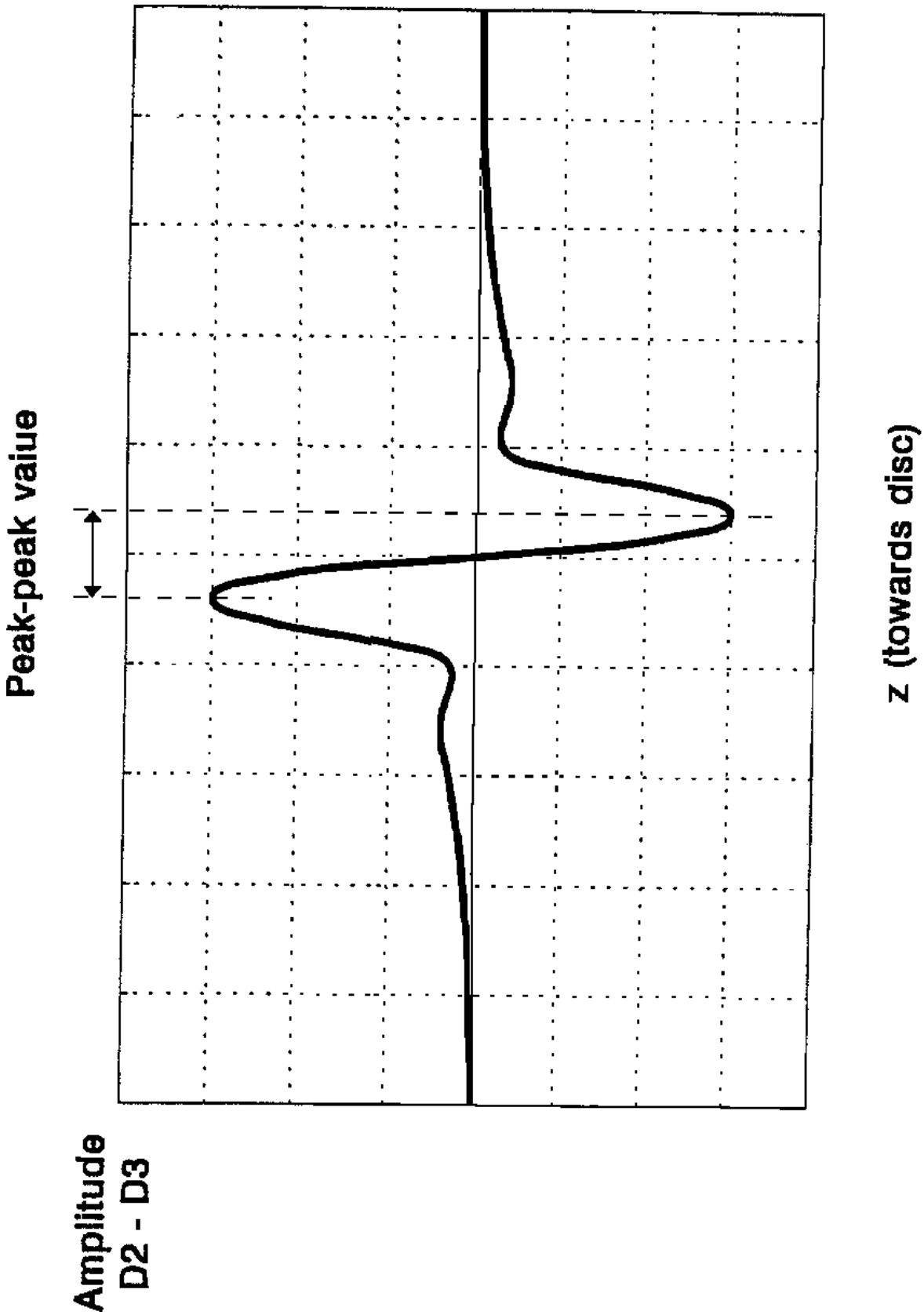

Fig. 10: Radial curve

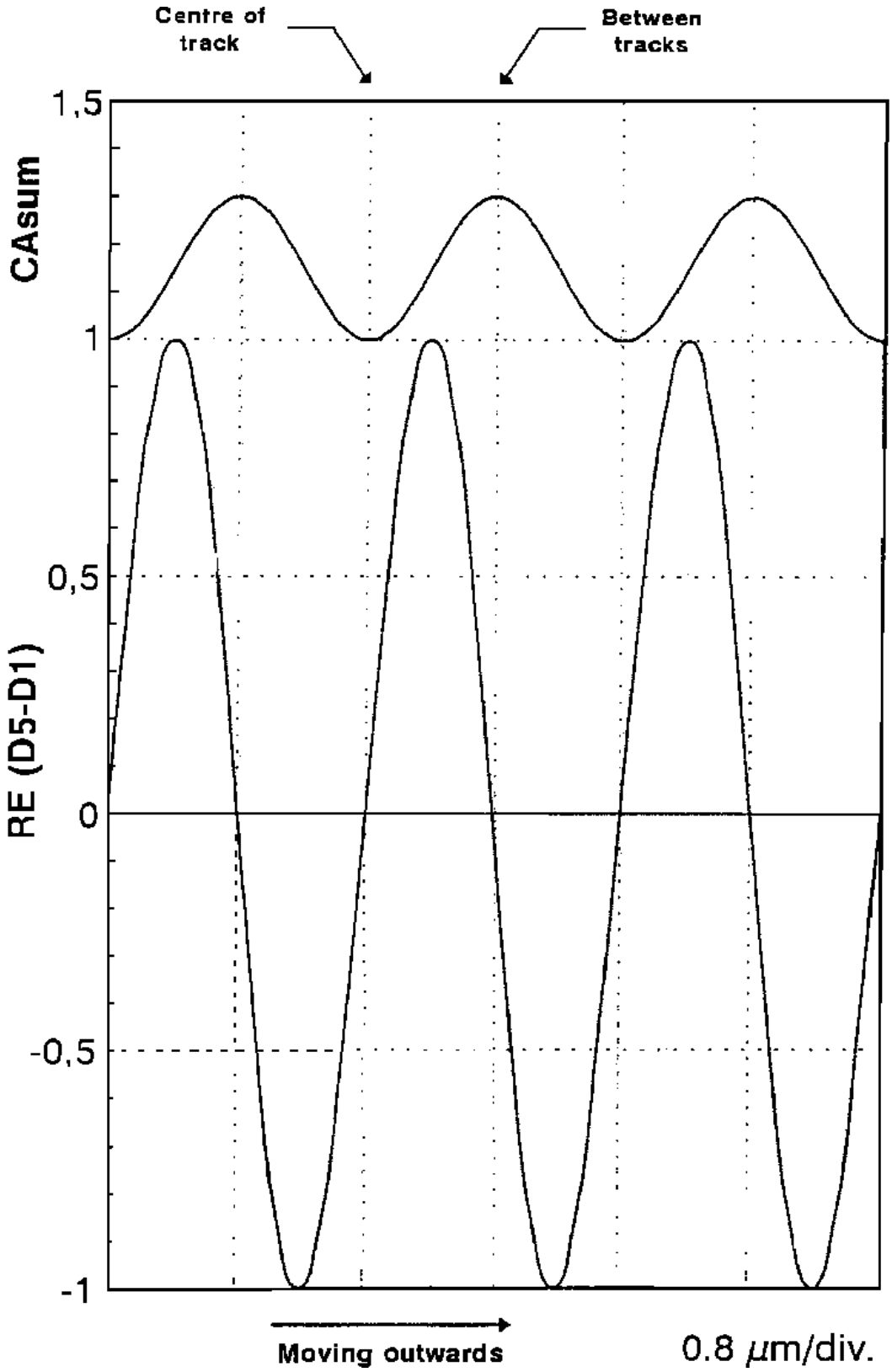

Fig. 11: Temperature factor

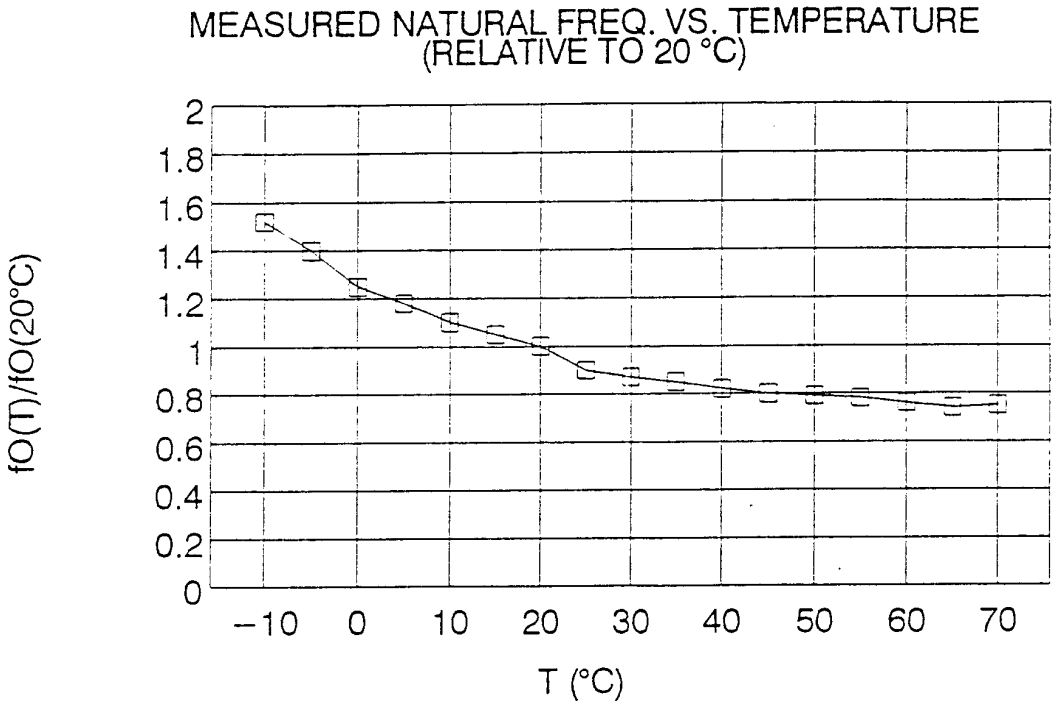

Fig. 12: Focus characteristics

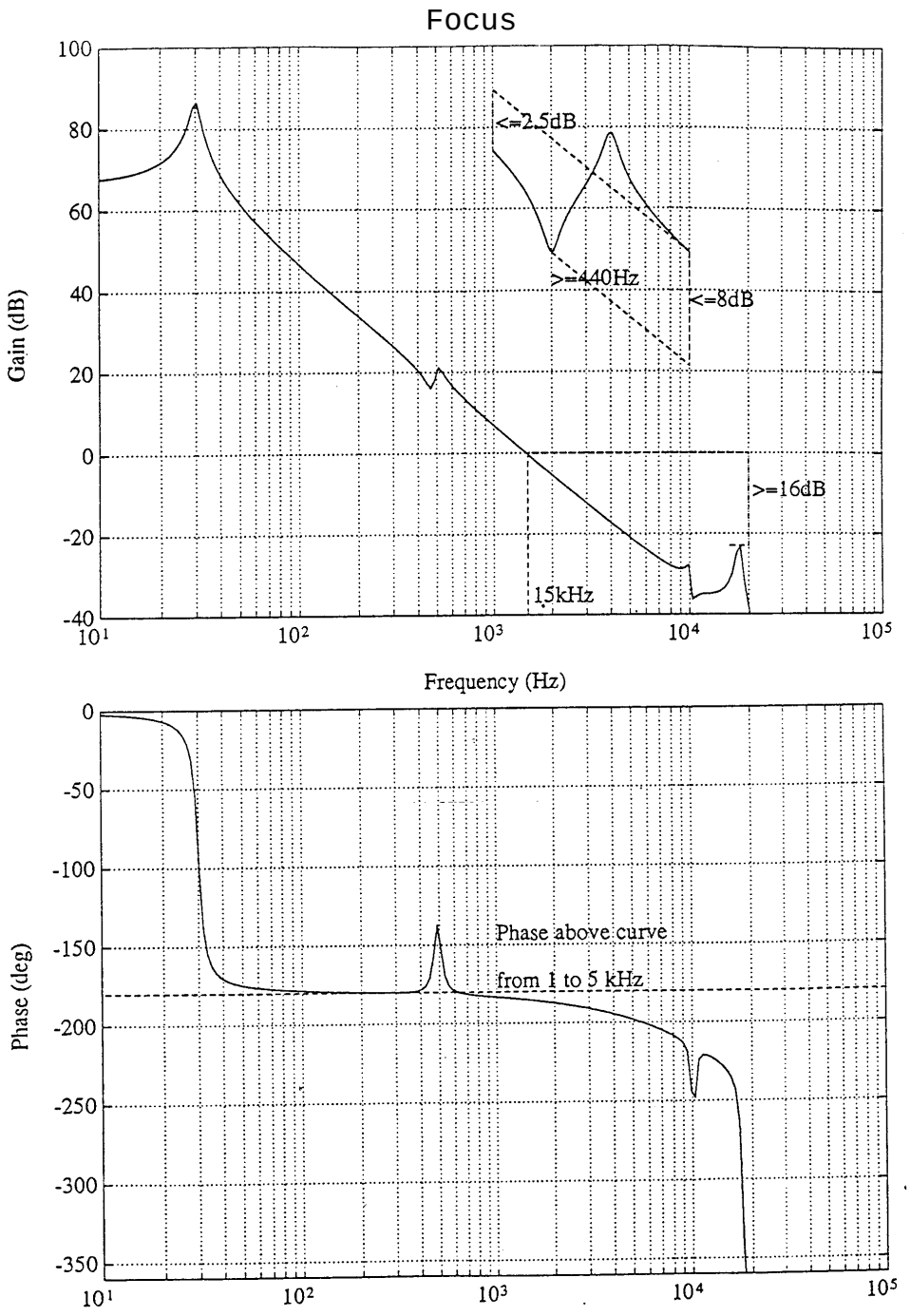

Fig. 13: Radial characteristics

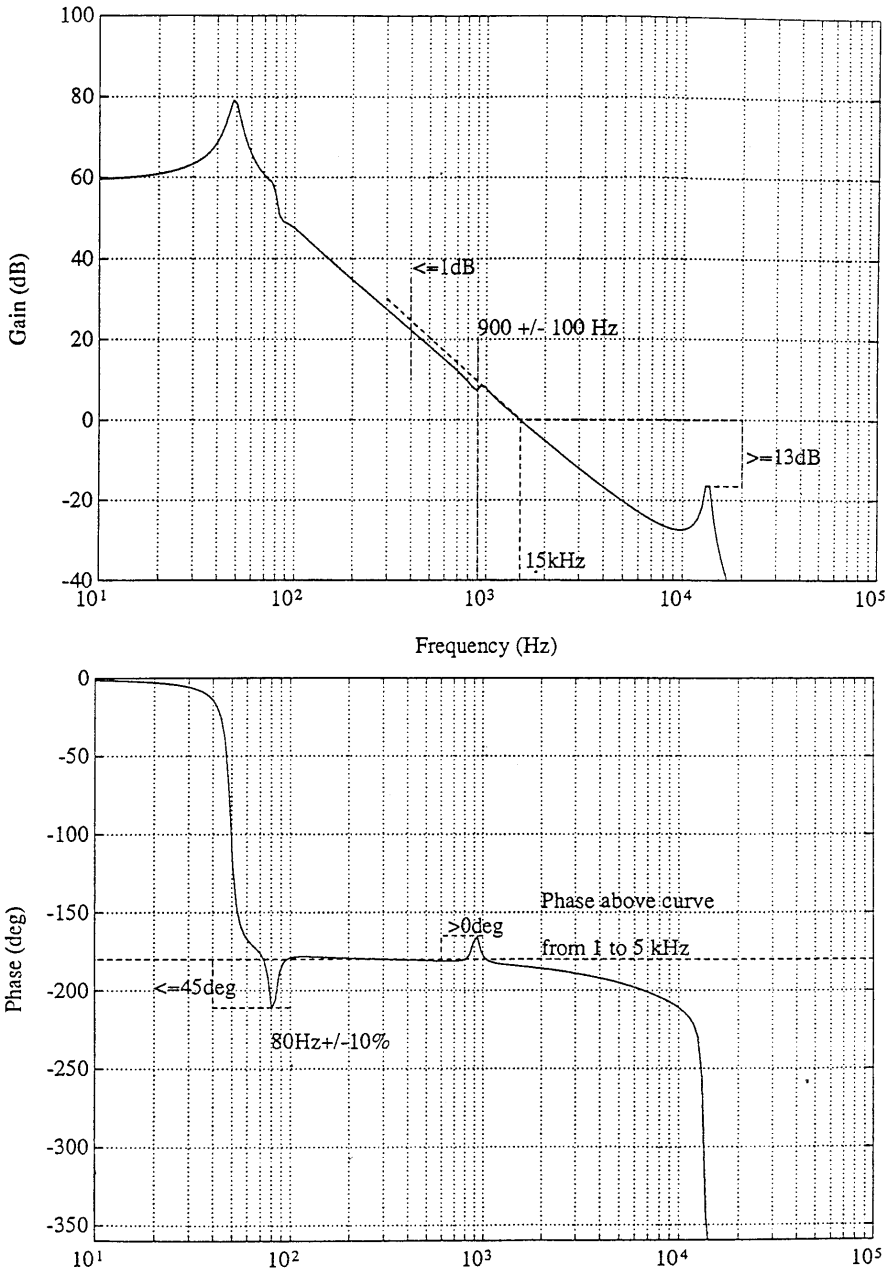

Fig. 14: Turntable

FOR INFORMATION ONLY
Note: Measurements are in mm.

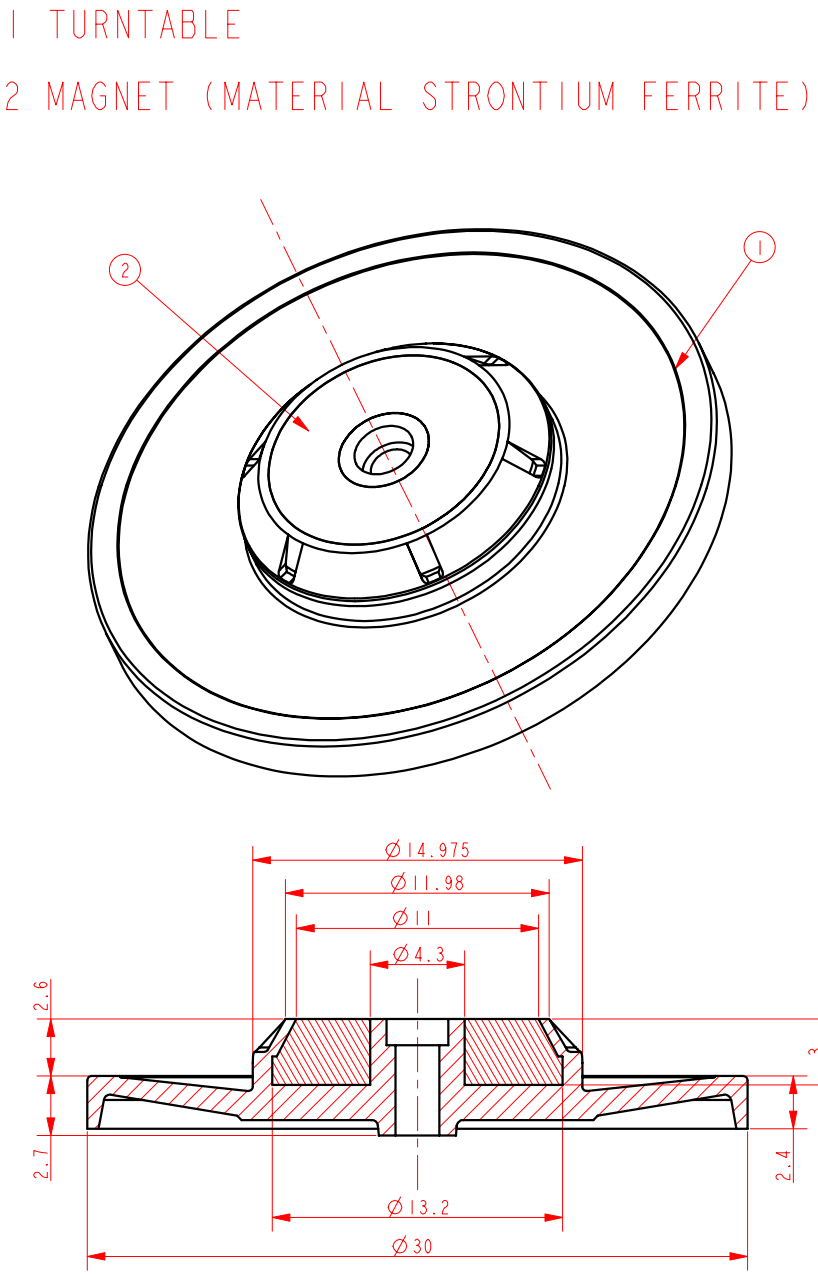

Fig. 15: Recommended ornamental plate

FOR INFORMATION ONLY
Note: Measurements are in mm.

12NC : 3104 144 21210

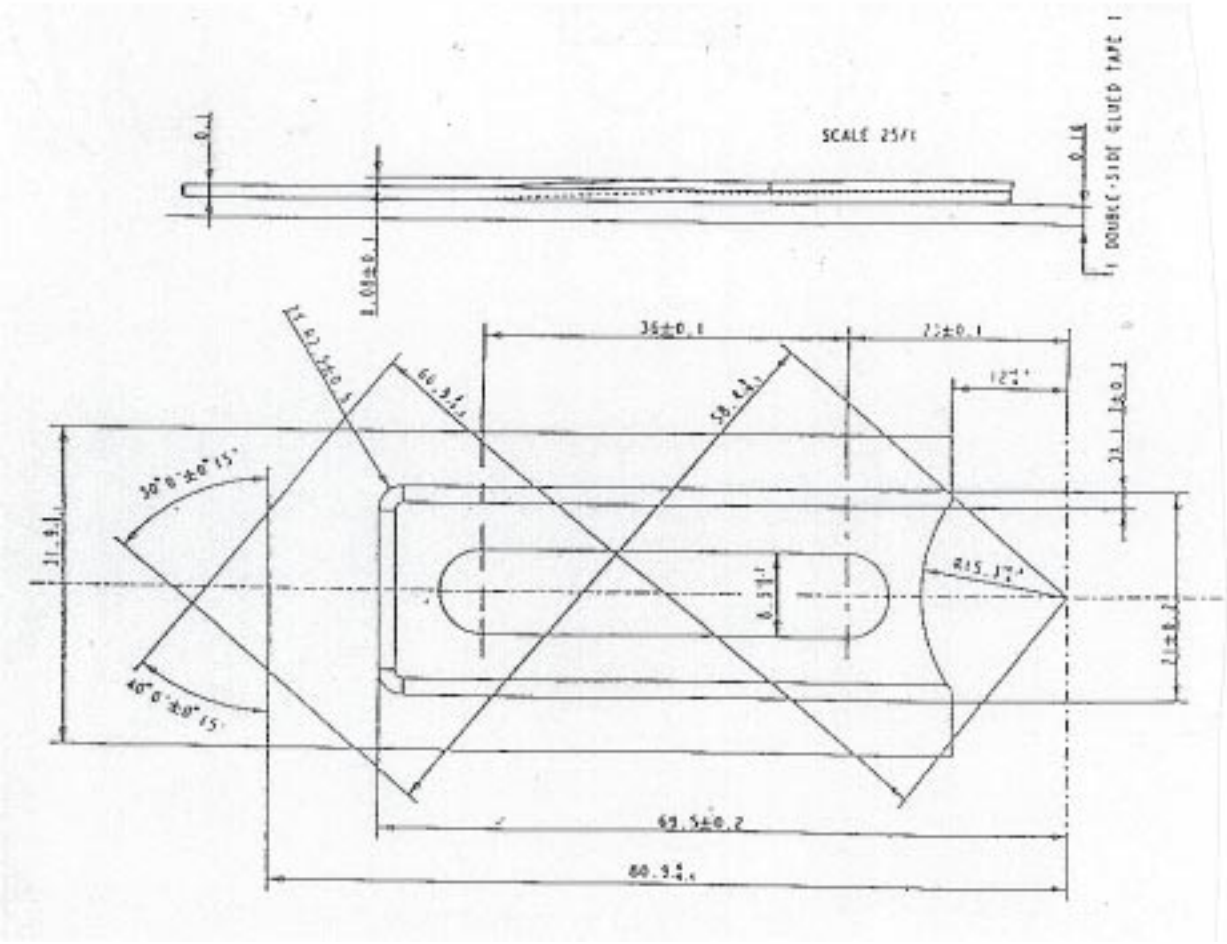

Fig. 16: Mechanical data foil

FOR INFORMATION ONLY
Note: Measurements are in mm.

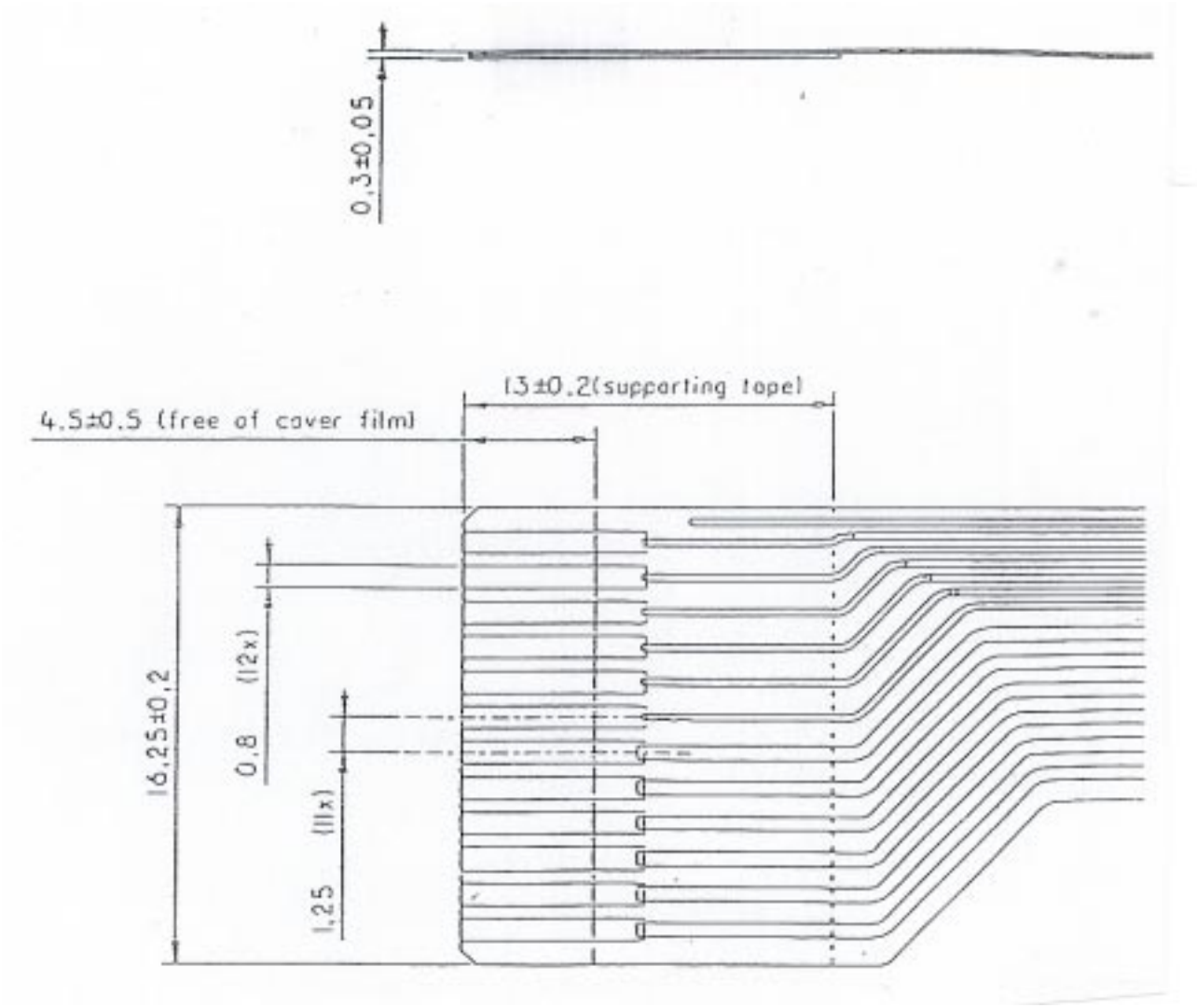

Fig. 17: Flexible foil application info

FOR INFORMATION ONLY
Note: Measurements are in mm.

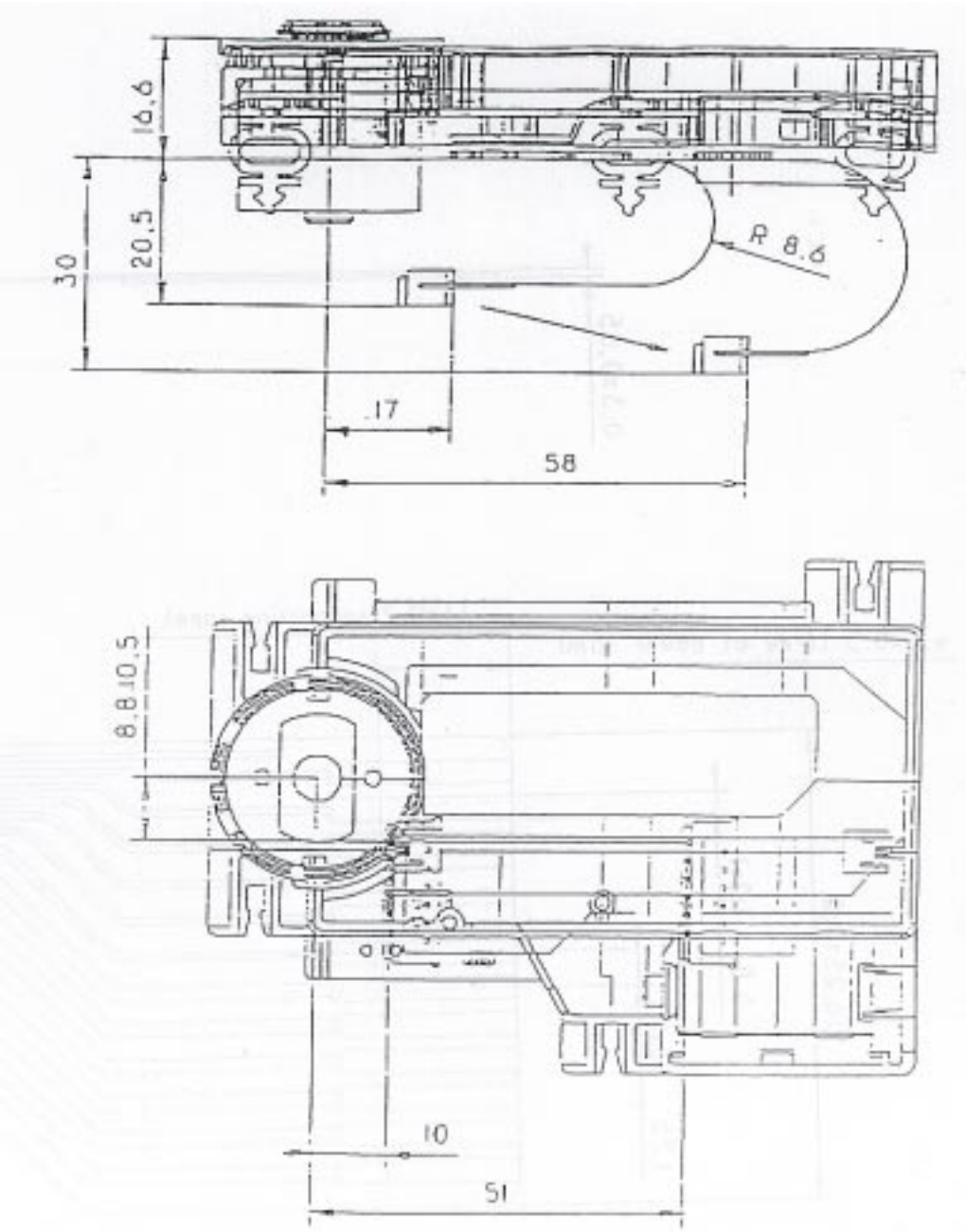

EXTREME LIMIT WHERE THE FLEX
CONNECTOR MAY BE POSITIONED

Fig. 18: ESD protection and handling instructions

Unpacking, testing and assembling

A. Avoid surge current or electrostatic discharge
- The mechanism may be damaged if a excessive current is applied to it, even if only a short pulse.
- For safe handling of the mechanism, grounding the human body and the measuring equipment is a must
- Make sure that there is no surge current in the driving circuit

B. Basic ESD countermeasures
- Use humidifiers when the relative humidity in the working environment is below 50%
- Use electroconductive mats over workbenches where the mechanism can be laid down. Resistance between $10^5\,\Omega$ and $10^9\Omega\,/cm^2$
- Use wrist straps (resistance between 200 kΩ and 1 MΩ)
- When it is difficult to discharge static electricity from the equipment and contacting dielectrics, use Ionizers
- All equipment and electric tools which are used, have to be connected to ground via a central grounding point on the table.

C. Introduce on regularly basis audits
- Static potentials must be < 150 V in all cases
- Audit “ALL” ESD countermeasures on regularly basis

D. Using ESD countermeasures
1. Charge-resistant apparel
2. Wrist strap
3. Charge-resistant shoes or ground strap
4. Electroconductive table mat
5. Electroconductive floor mat
6. Ionizer air blower (must not generate ozone for health reasons)
7. Ground wire (1 MΩ)

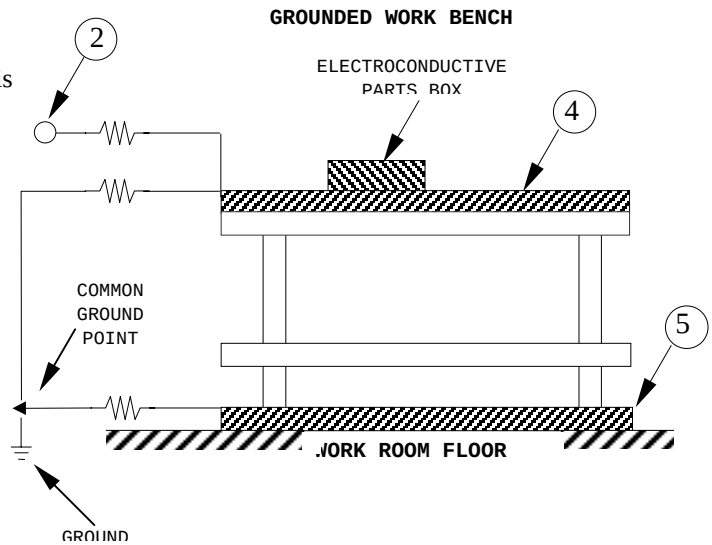

Fig. 19: Contents and placement of label

Lay out of label for VAM1202/12

DESCRIPTION	DATA
	PHILIPS LOGO
VAM1202/12	Model name
9305 022 20212	Code number (12 NC)
E143838	UL-file number (Fabricant name)
1VO	Production allocation
00	Change code
9717	Year and week code
00	Production group/line
05511	Serial number
cUL/UL (symbols)	UL recognised marks for USA and Canada
DANGER: INVISIBLE LASER RADIATION WHEN OPEN. AVOID DIRECT EXPOSURE TO BEAM.	USA-laser warning

Sample Label :-

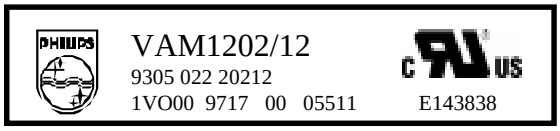

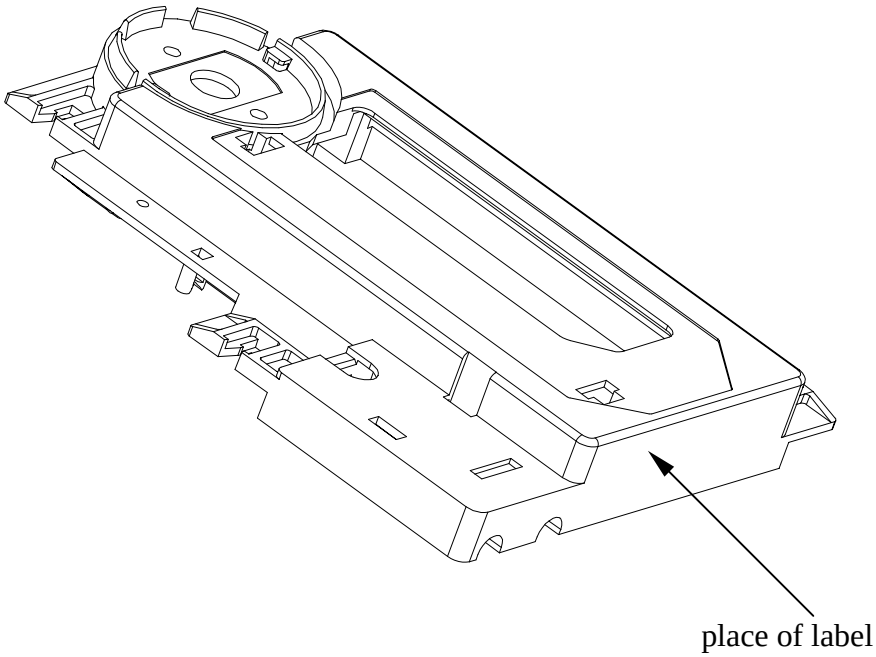

APPENDIX 1: Mabuchi FF-030PK-08250 Motor Data

Note: FOR INFORMATION ONLY

STANDARD OPERATION CONDITION

Parameter	Min.	Typ.	Max.	Unit	Notes
Rated voltage		6		Vdc	
Working voltage range	3.7		7	Vdc	
Rated load		5		g-cm	
Rotation direction					CW

INITIAL CHARACTERISTIC SPECIFICATION

Parameter	Min.	Typ.	Max.	Unit	Notes
No load speed at rated voltage	9200	10500	11800	rpm	
Rated load speed at rated voltage	6650	7650	8650	rpm	
Rated load current at rated voltage			200	mA	
No load current at rated voltage			80	mA	
No load starting voltage			0.9	V	
Starting current at rated voltage			510	mA	
Starting torque at rated voltage	12			g-cm	
Insulation resistance	1			Mo	20 °C, 65 % R.H.
Rotor resistance	12.42	13.8	15.18	o	20 °C
Electro-motive force	1.40	1.56	1.72	V	20 °C, 3000 rpm

APPENDIX 2: Mabuchi RF-300CH-11400 Motor Data

Note: FOR INFORMATION ONLY

STANDARD OPERATION CONDITION

Parameter	Min.	Typ.	Max.	Unit	Notes
Rated voltage		3.9		Vdc	
Working voltage range	2.8		6	Vdc	
Rated load		9		g-cm	
Rotation direction					CW/CCW

INITIAL CHARACTERISTIC SPECIFICATION

Parameter	Min.	Typ.	Max.	Unit	Notes
No load speed at rated voltage	4370	4850	5330	rpm	
Rated load speed at rated voltage	2700	3000	3300	rpm	
Rated load current at rated voltage			195	mA	
No load current at rated voltage			35	mA	
No load starting voltage			0.8	V	
Starting current at rated voltage	335	375	415	mA	
Starting torque at rated voltage	17			g-cm	
Insulation resistance	10			MO	20 °C, 65 % R.H.
Rotor resistance	9.45	10.27	11.09	O	20 °C
Electro-motive force	2.08	2.26	2.44	V	20 °C, 3000 rpm