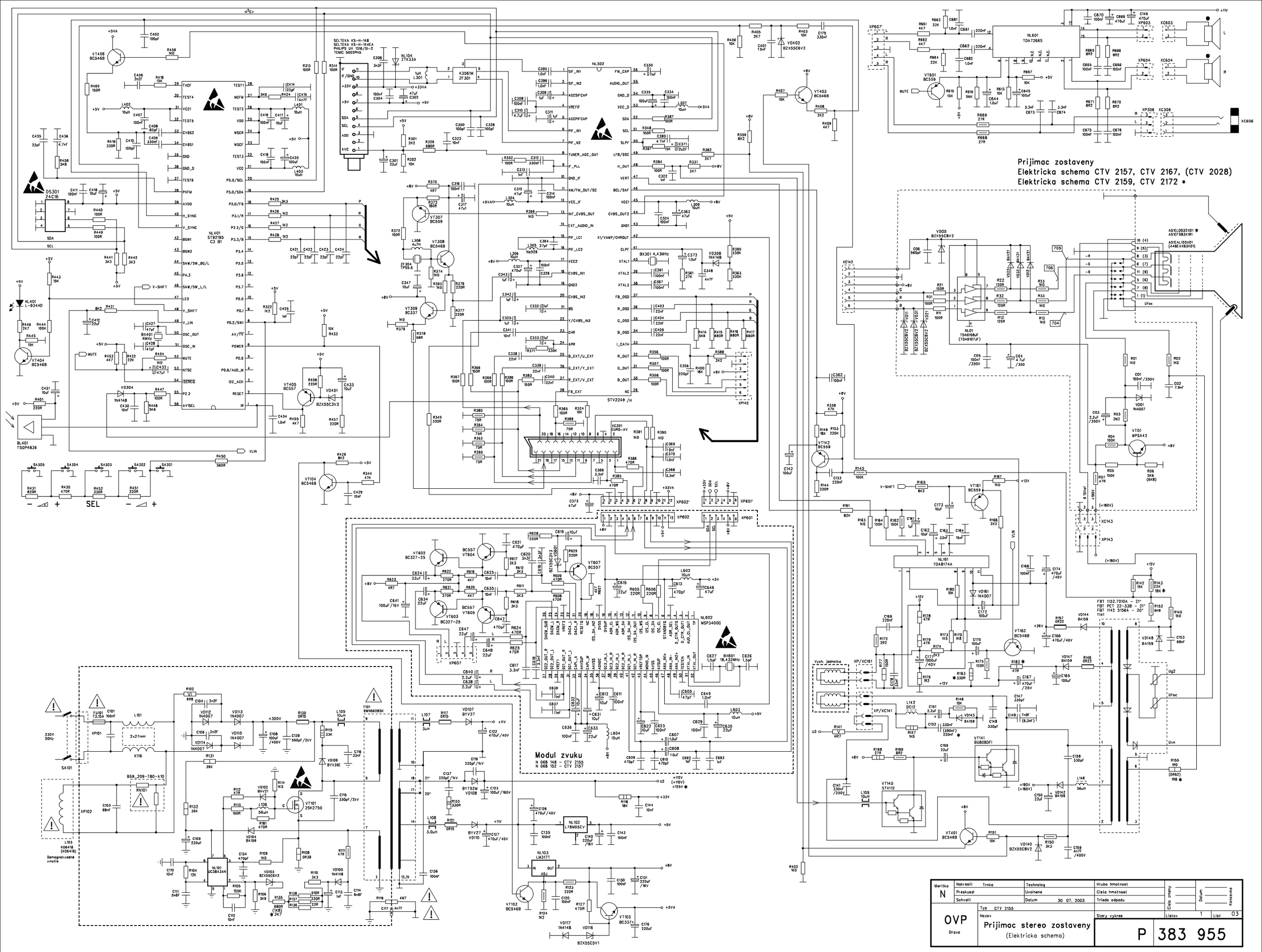
Prijimac zostaveny
Elektricka schema CTV 2157, CTV 2167, (CTV 2028)
Elektricka schema CTV 2159, CTV 2172 *
Modul zvuku
N 068 148 - CTV 2155
N 068 152 - CTV 2157
NL501
ST92195
C3 B1
STV2249 /H
NL502
NL601
TDA7266S
NL101
TDA6108JF
(TDA6107JF)
NL161
TDA8174A
NL602
MSP3400G
NL102
L78M05CV
NL103
LM317T
NL101
UC3843AN
VT101
2SK2750
VT141
BU808DFI
VT145
STX112
VT162
BC546B
FBT 1152.7010A - 21"
FBT PCT 22-33B - 21"
FBT 1142 5156A - 20"
T141
Vych. jednotka
XP/XC161
XP/XC141
Ufoc
Uvn
Ug2
230V
50Hz
SA101
XP101
XP102
K116
L101
2x27mH
B59_209-T80-A10
RN101
L103
K06418
(K06419)
Demagnetizacna vinutie
T101
SWN6608SK
L105
10uH
R150
0R15
R155
1R0
(0R62)
1R8 *
R182 *
47R
R183 * 330R
R141
4R7
U2
+112V
(+110V)
+125V *
+33V
+5V
+8V
+5VA
+11V
+12V
+26V
+190V
(+180V)
+300V
VT401
BC546B
VD140
BZX55C8V2
R151
10K
R150
3K3
C159
4n7F
/400V
VT102
BC546B
VT103
BC337
VD117
1N4148
VD116
BZX55C5V1
R402
1K0
R116
4M7
C117
4n7F
C116
33nF
C115
330pF/2kV
C114
6n8F
C113
1nF
C112
10nF
C111
5n6F
C110
10nF
C109
220pF
C108
100nF
/400V
C107
560pF/2kV
C106
2n2F
C104
2n2F
C103
68nF
C102
7.9nF
C101
100nF
FU101
T3.15A
VD101
VD102
VD103
VD104
VD105
VD106
VD107
VD108
VD109
VD110
VD111
VD112
VD113
VD114
VD115
VD116
VD117
VD118
VD119
VD120
VD121
VD122
VD123
VD124
VD125
VD126
VD127
VD128
VD129
VD130
VD131
VD132
VD133
VD134
VD135
VD136
VD137
VD138
VD139
VD140