Telefunken 165 GWK

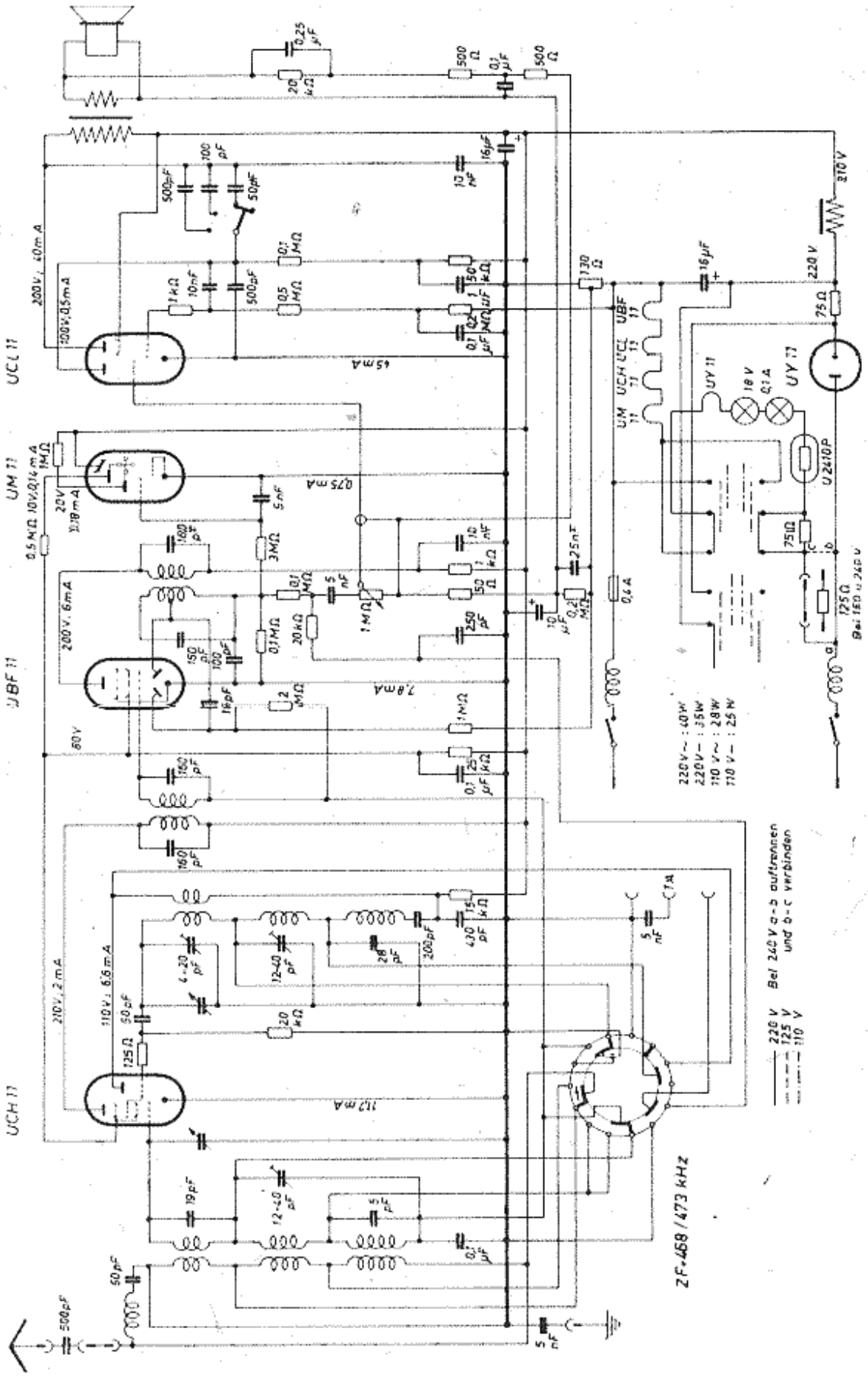

www.radiomuseum.org; upload by Hermann Freudenberg † 2006; download by Ivan Notev Wed Feb 25 09:48:01 UTC 2026 [667 x 1061, 34kb, ? DPI]